--NOTES--
1. HOT DIP GALVANIZED PER ASTM A153

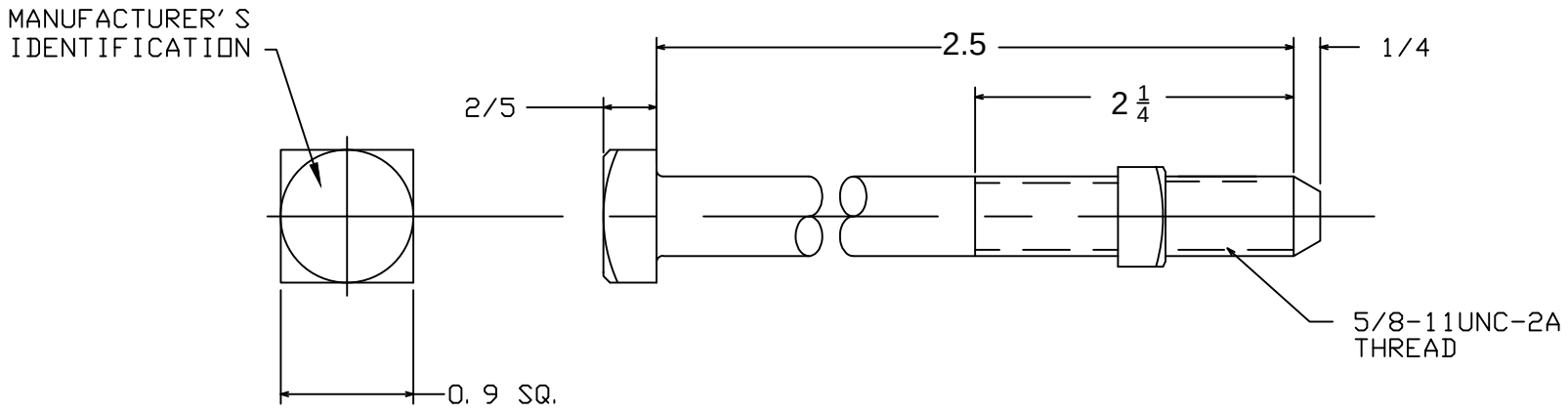

CATALOG NUMBER
8802 1/2

CHANCE®
TOLERANCE CHART

CONFIDENTIAL: THIS DRAWING AND ITS CONTENTS ARE CONFIDENTIAL AND THE EXCLUSIVE PROPERTY OF HUBBELL POWER SYSTEMS. NO PUBLICATION, DISTRIBUTION OR COPIES MAY BE MADE WITHOUT THE WRITTEN CONSENT OF HUBBELL POWER SYSTEMS. HUBBELL POWER SYSTEMS UNPUBLISHED ALL RIGHTS RESERVED UNDER THE COPYRIGHT LAWS.

®HUBBELL® POWER SYSTEMS

TITLE: 5/8 MACHINE BOLT

SIZE	DWG NO.	CAT / PART / ASSY NO.	REV
D	SA880212	8802 1/2	-

DO NOT SCALE THIS DRAWING	DRN BY JMK	DATE 01/16/13	SHEET 1 OF 1

1:1